HUSSMANN

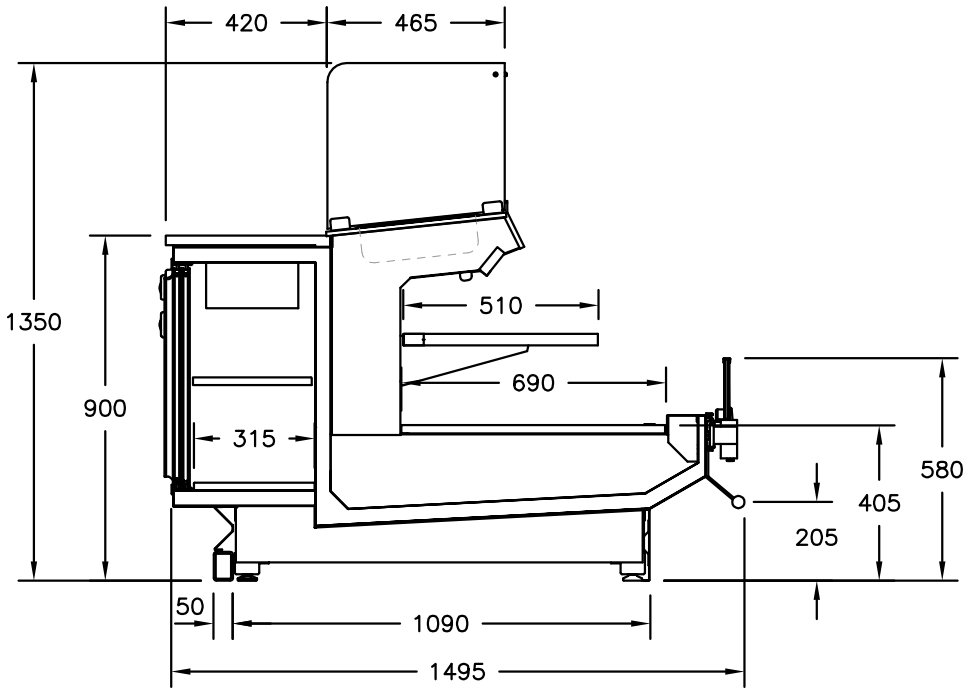

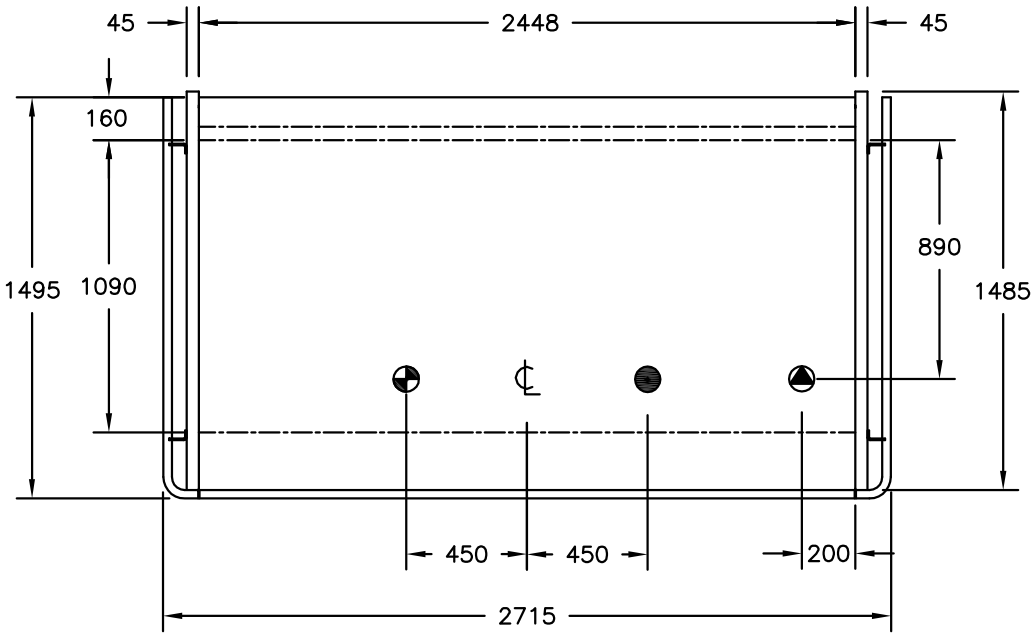

DRAIN
ELECTRICAL
REFRIGERATION

MODEL
NS09

DESCRIPTION
SUSHI

JANUARY 2020