DAIRY

SMN163

LOW HEIGHT NARROW SEMI VERTICAL CABINET

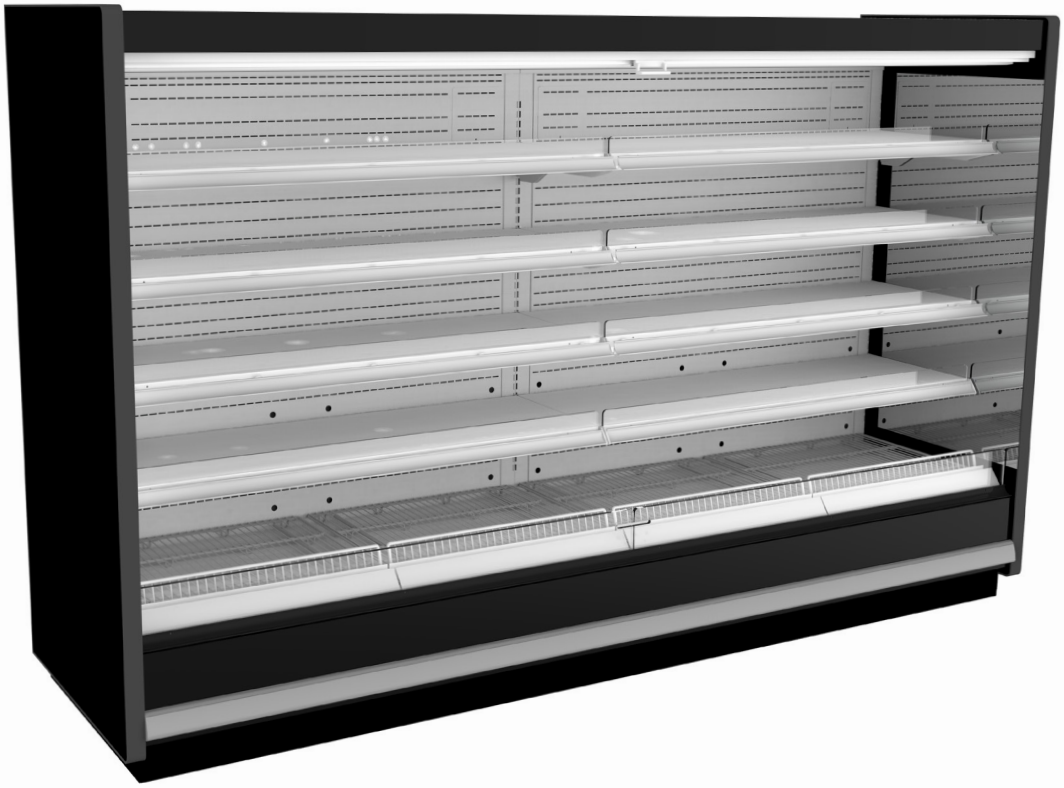

ENHANCED ENERGY EFFICIENCY
& VERSATILITY

HUSSMANN®

PRODUCT BENEFITS

- Low height provides open space
- Ergonomic design for easy access
- Shelf depth variety to optimise merchandising
- Optimised display with LED lighting
- Low Total Energy Consumption (TEC)
- Longer merchandise shelf life
- Product temperature compliance
- Simple to install and maintain
- Designed for modular configurations
- Ideal for island configurations

STANDARD FEATURES

- Internal and external powder coating
- Single row of 4000K LED canopy lighting
- Undershelf lighting 4000K
- 4 rows of powder coated shelves. 4x 400mm
- Wire product fences 45mm
- Adjustable base wire tray with 55mm front
- Ticket strips
- Wire air return grill
- Galvanised base
- Rubber bumper
- Evaporator assembly fitted with valve
- EC fan motors
- Digital thermometer display fitted
- Alarm probe fitted with conduit and draw wire
- Standard n/a door

CUSTOMISATIONS

Shelving & Base Shelf

- Optional additional shelves and brackets
- Stainless steel reinforced solid shelving and base tray
- Roller shelving (optional product divider)
- Hang sell and bar
- Wire or acrylic shelf fences (45mm, 75mm)

Lighting

- Canopy lighting
- Under-shelf lighting
- Premium lighting available

Ends

- Solid mirror ends / Glass view ends
- Common end
- Acrylic full height system divider

Bumper

- Stainless steel bumper (single or double rail)

Other

- Rear dress panels
- Valance panels - top or lower rear
- Technology solutions
- Electronic shelf labels or video rail

Energy & Sustainability

- Air-Guide technology
- Door solutions

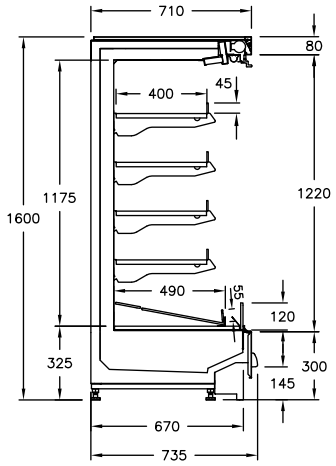

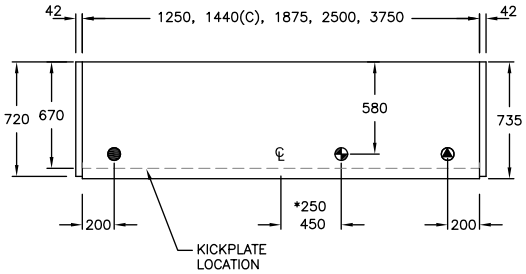

AVAILABLE LENGTHS

Excluding Ends: 1250, 1875, 2500, 3750
Crown End: 1440

AVAILABLE DEPTHS

SMN - Narrow: 735
SMD - Standard: 835
SME - Standard: 895

TEMPERATURE CLASS

3M1

(-1˚C to +5˚C)

AVAILABLE COLOURS

RAL9005 | GN150A | GL180A | GY070A | MW201T | GL205A | RAL9003 | RAL9010

Additional Information
All Dimensions shown in Millimetres (mm) unless otherwise stated. Dimensions and features are subject to change. Please obtain current technical information prior to order confirmation.

NOTE: We reserve the right to change or revise specifications and product design in connection with any feature of our products. Such changes do not entitle the buyer to corresponding changes, improvements, additions or replacements for equipment previously sold or Shipped.

© 2020 Hussmann Corporation - Version - V.1.0

Australia Head Office
66 Glendenning Road Glendenning, NSW 2761 Australia
ph. +612 8805 0400
w. www.hussmann.com.au

HUSSMANN®