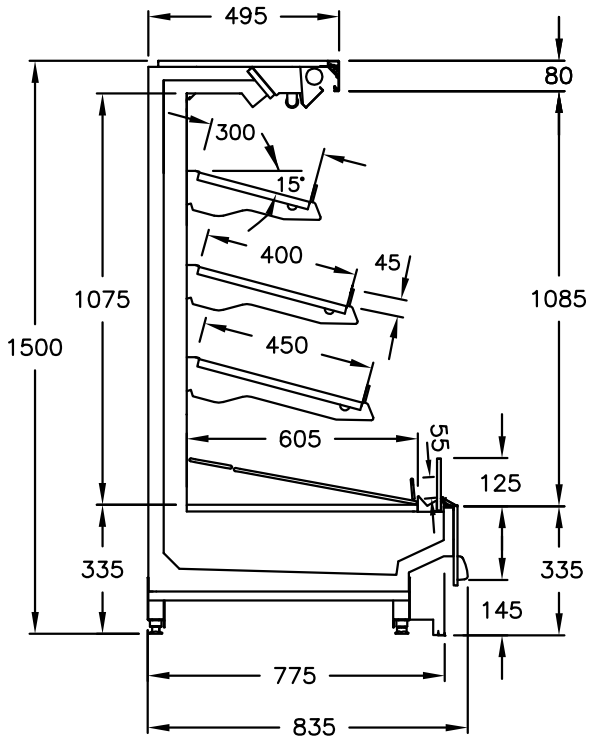

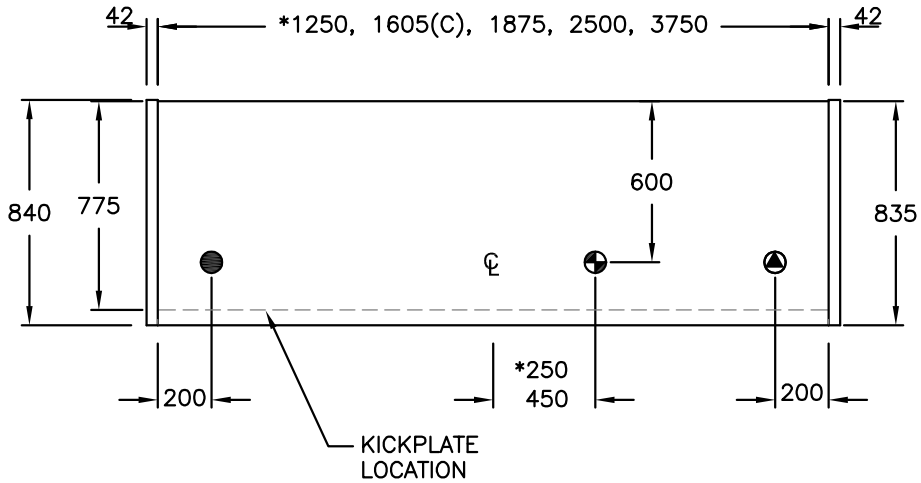

DRAIN
E ELECTRICAL
R REFRIGERATION

MODEL
SMD1500

REFERENCE
SEMI-VERTICAL BAKERY

JANUARY 2020