HUSSMANN

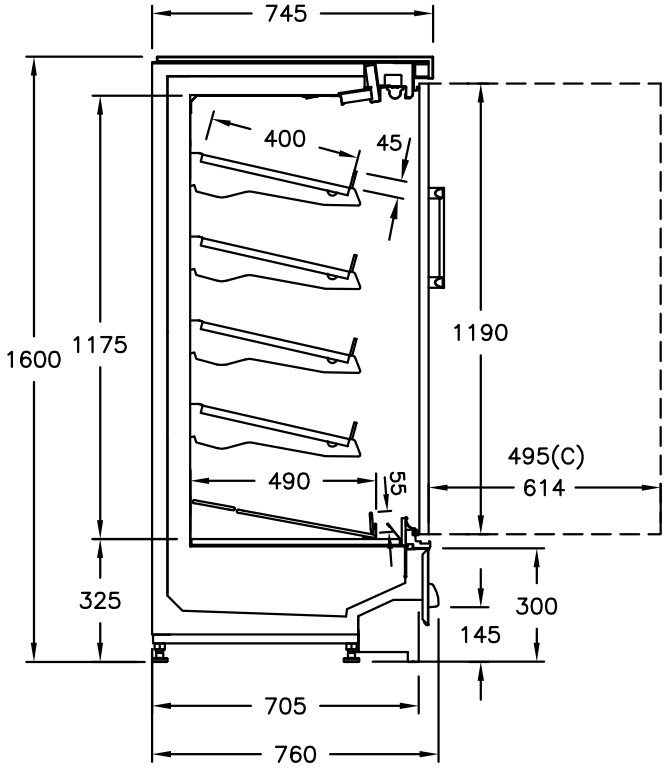

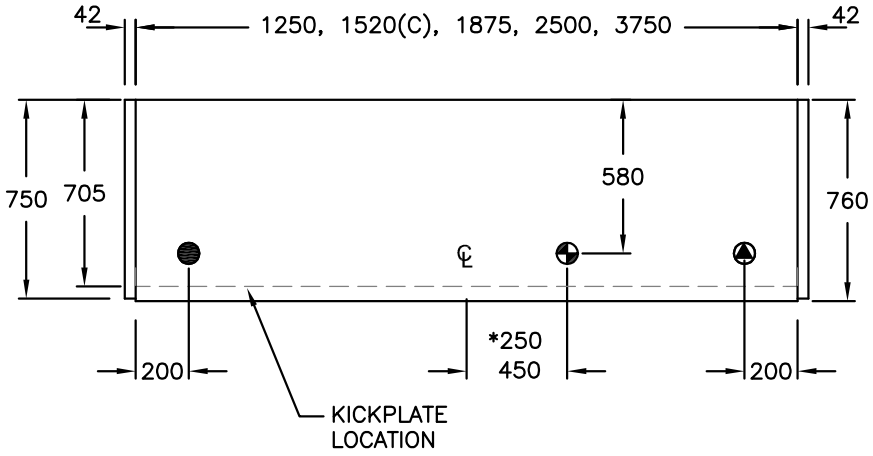

DRAIN

E ELECTRICAL

R REFRIGERATION

MODEL
SMND163

DESCRIPTION
NARROW SEMI-VERTICAL MEAT

JANUARY 2020