HUSSMANN

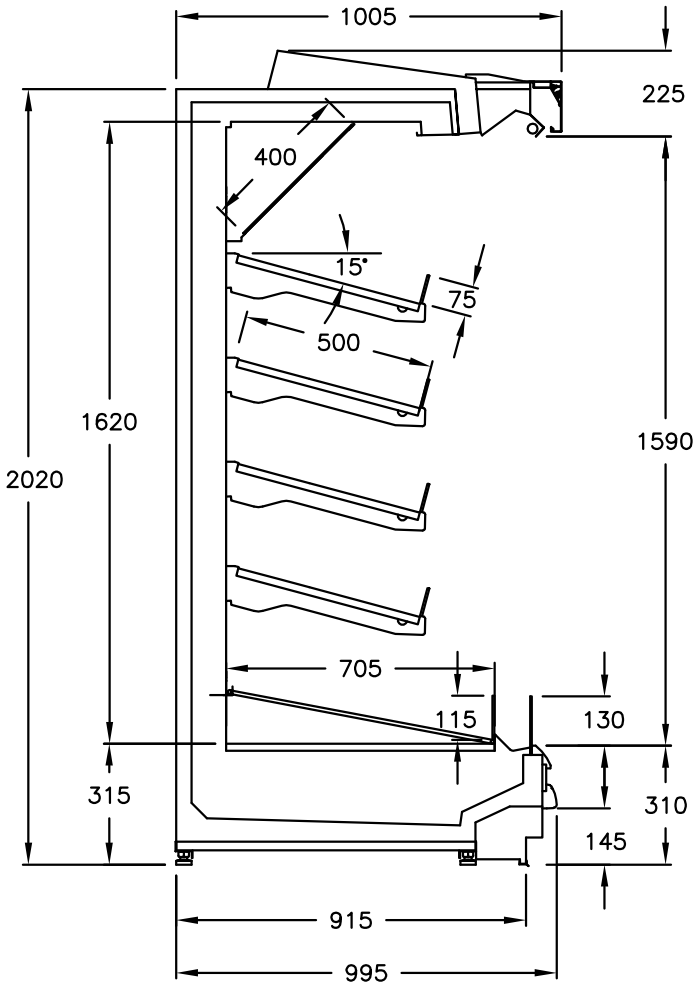

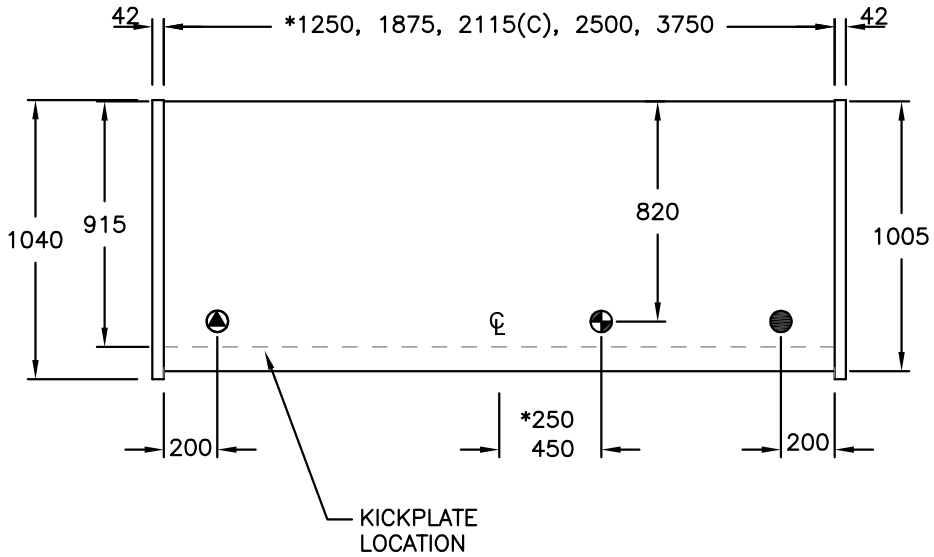

DRAIN
E ELECTRICAL
R REFRIGERATION

MODEL
MJPE216

REFERENCE
MULTIDECK MEAT

JANUARY 2020