HUSSMANN

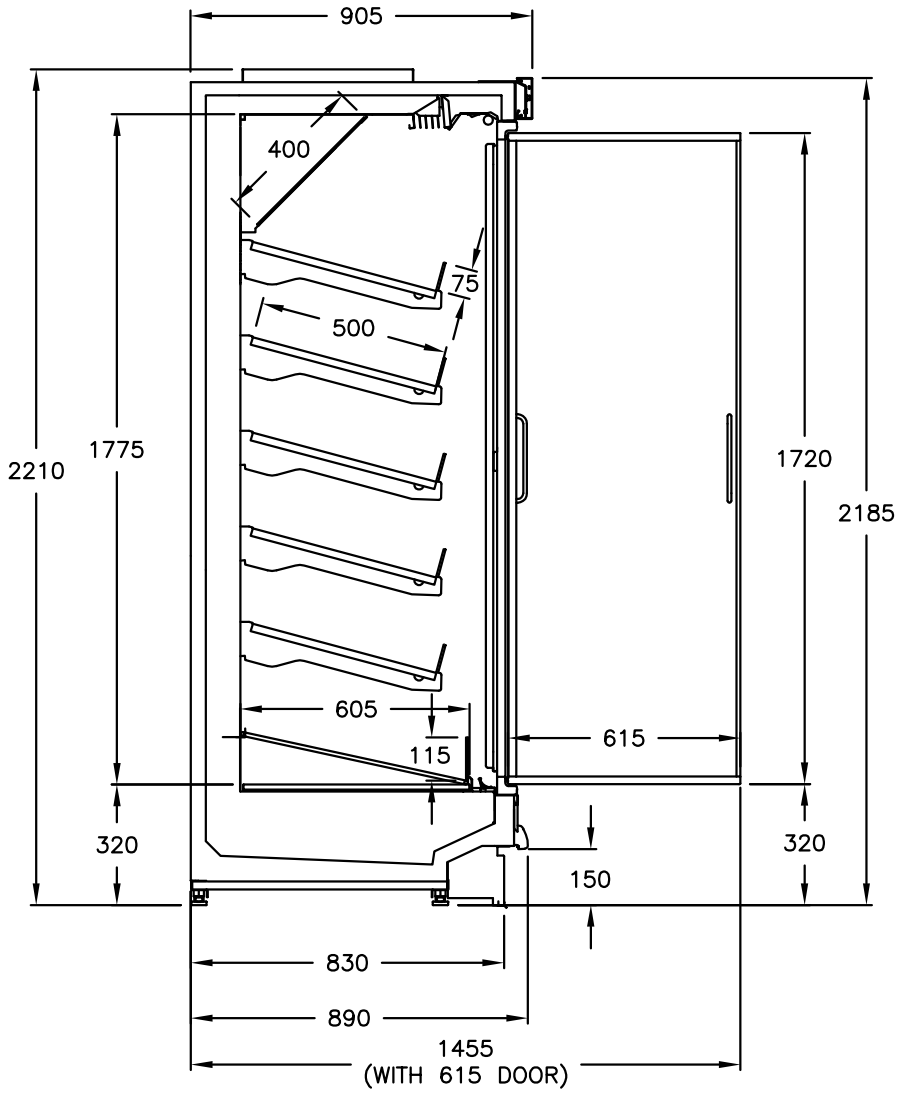

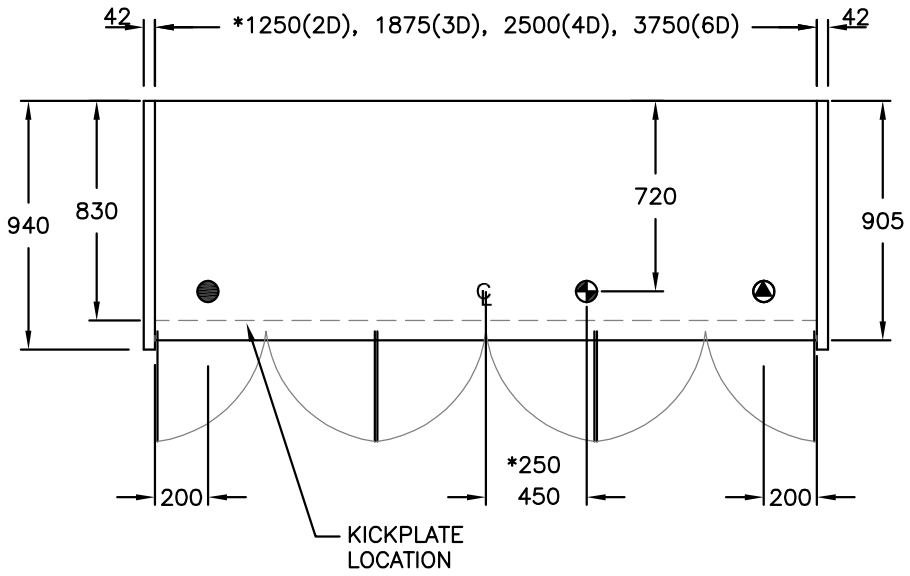

DRAIN
E ELECTRICAL
R REFRIGERATION

MODEL
MPD118

DESCRIPTION
NARROW MULTIDECK MEAT DOOR

JANUARY 2020