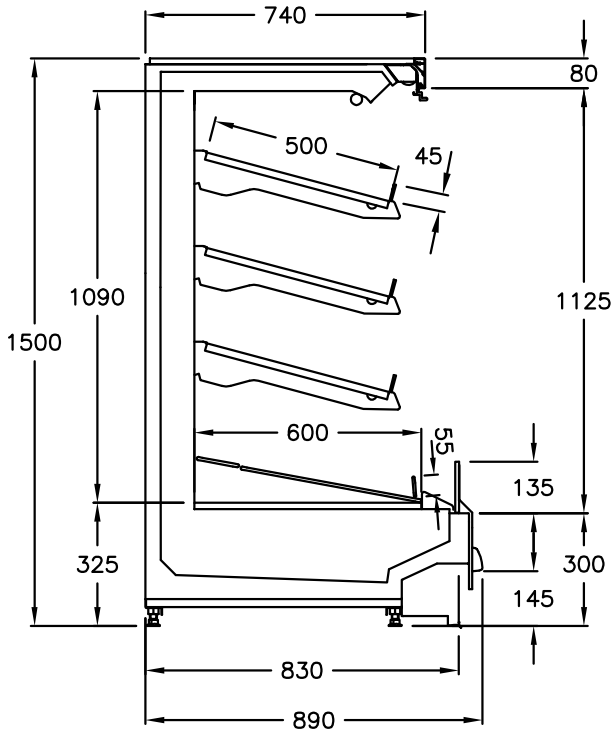

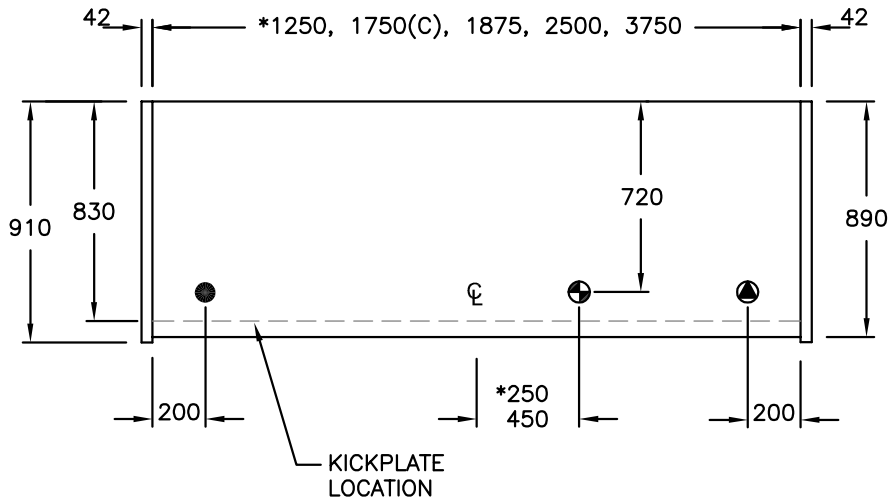

DRAIN
E ELECTRICAL
R REFRIGERATION

MODEL
SME152

REFERENCE
SEMI-VERTICAL BAKERY

JANUARY 2020